AIRBEST

AGS-D Series

Vacuum Pump

Features

◇ Small size,simple structure,easy to maintain.
◇ Vacuum port G1/2, can be assembled with suction cups directly
◇ Multi-angle mounting positions and mounting accessories are optional for easy installation.
◇ Various vacuum cartridges are available for different applications.
◇ Suitable for applications which require large vacuum flow.
◇ External silencer is optional at exhaust port.

Vacuum flow(NL/min) at different vacuum levels(-kPa)

Model	Air supply pressure(bar)	Air consumption (NL/min)	0	10	20	30	40	50	60	70	80	90	Max.vacuum level (-kPa)
AGS-D-S32-2	4.0	120	172	136	92	60	44	26.2	10.5	-	-	-	60
	5.0	125	180	156	116	72	48	36	26.9	12.8	-	-	70
	6.0	130	178	164	134	94	50	38	32	18.3	-	-	75
AGS-D-S32-3	4.0	120	350	152	110	64	50	26.7	11.5	-	-	-	60
	5.0	125	370	185	125	90	50	36.2	27.3	13.9	-	-	70
	6.0	130	390	210	135	100	65	35.1	30.3	18.3	-	-	75
AGS-D-X40-2	4.5	120	170	136	100	58	40	36	25	17.8	11.7	3.1	91
	5.0	125	170	140	106	74	46	34	24	17.6	10.8	2.9	95
	6.0	135	162	142	116	92	68	40	22.5	17.8	9.4	2.3	94
AGS-D-X40-3	4.5	120	350	175	120	80	44	32.7	24.5	17.8	11.6	3.2	91
	5.0	125	360	190	125	95	65	36	26	17.6	10.8	2.8	95
	6.0	135	380	220	130	105	90	54	26	17.8	9.3	2.2	94

Evacuation time(s/L) to reach different vacuum levels(-kPa)

Model	Air supply pressure(bar)	Air consumption (NL/min)	10	20	30	40	50	60	70	80	90	Max.vacuum level (-kPa)
AGS-D-S32-2	4.0	120	0.04	0.08	0.16	0.27	0.47	0.98	-	-	-	60
	5.0	125	0.04	0.08	0.14	0.25	0.39	0.63	1.17	-	-	70
	6.0	130	0.04	0.08	0.13	0.21	0.36	0.55	0.86	-	-	75
AGS-D-S32-3	4.0	120	0.03	0.08	0.15	0.26	0.44	0.94	-	-	-	60
	5.0	125	0.03	0.07	0.13	0.23	0.38	0.61	1.07	-	-	70
	6.0	130	0.03	0.05	0.10	0.18	0.36	0.56	0.87	-	-	75
AGS-D-X40-2	4.5	120	0.04	0.08	0.15	0.28	0.46	0.66	0.99	1.15	-	91
	5.0	125	0.04	0.08	0.14	0.24	0.41	0.66	1.02	1.52	3.27	95
	6.0	135	0.04	0.08	0.14	0.20	0.30	0.57	0.95	1.55	3.70	94
AGS-D-X40-3	4.5	120	0.03	0.07	0.13	0.23	0.38	0.63	0.97	1.50	3.25	91
	5.0	125	0.03	0.07	0.14	0.21	0.37	0.62	0.99	1.46	3.23	95
	6.0	135	0.03	0.05	0.10	0.16	0.27	0.47	0.86	1.45	3.92	94

Dimensions(mm)

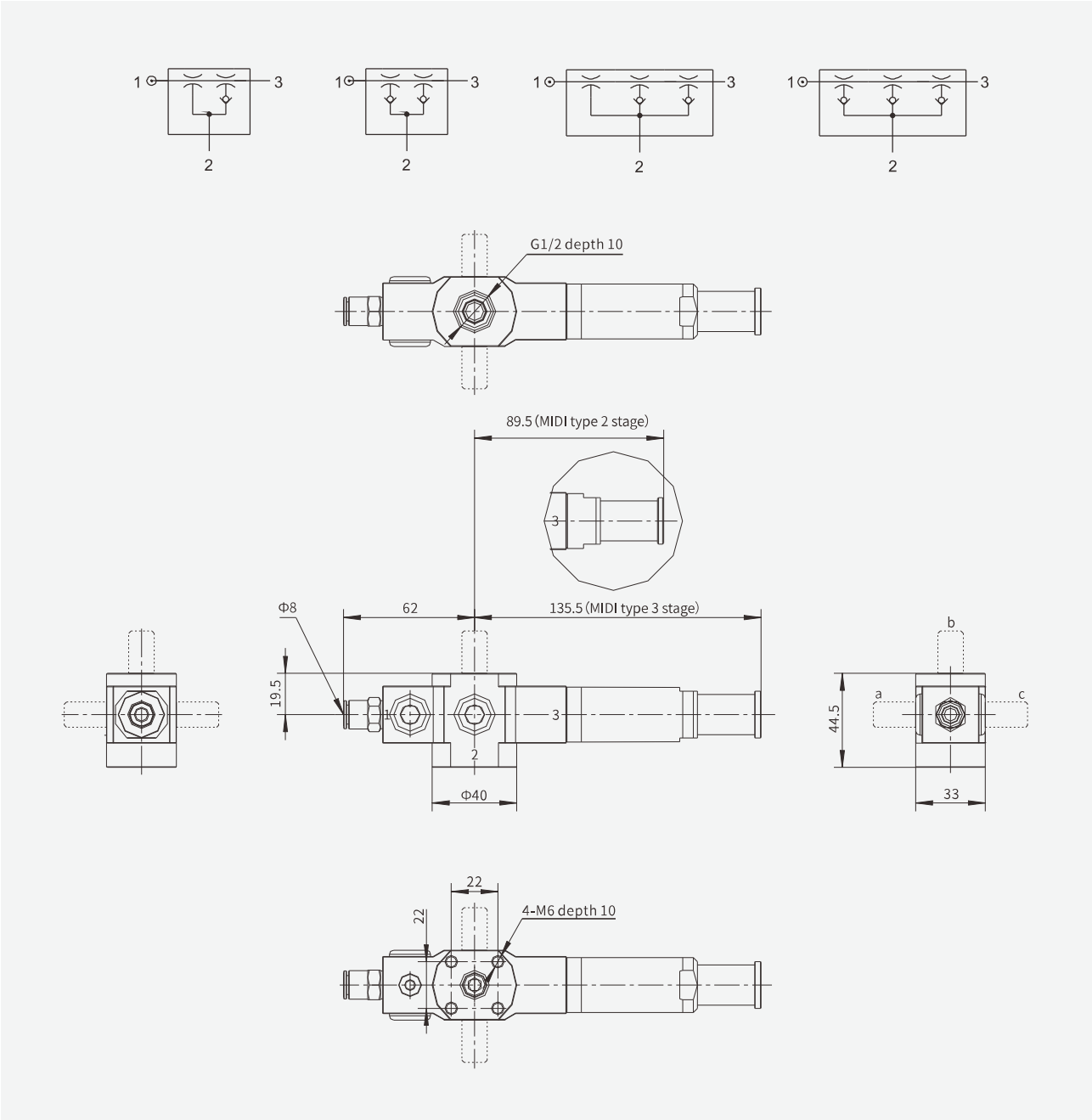

Note: The mounting bolt at position a/b/c can be chosen from mounting accessories type F/type G /type H/type K.Factory default is type F .

Model selection

Housing	Vacuum cartridge
MIDI type 2stage	S32-2, X40-2
MIDI type 3stage	S32-3, X40-3

AGS-D Series

Vacuum Pump

Mounting accessory(mm)

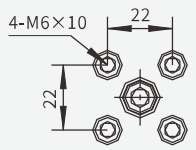

Type F -M6 screw

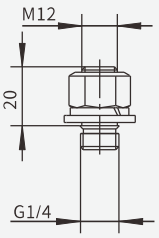

Type H -M12 bolt

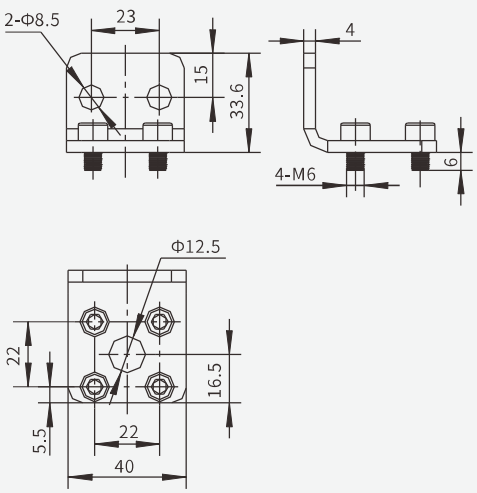

Type G-M6 screw+L bracket

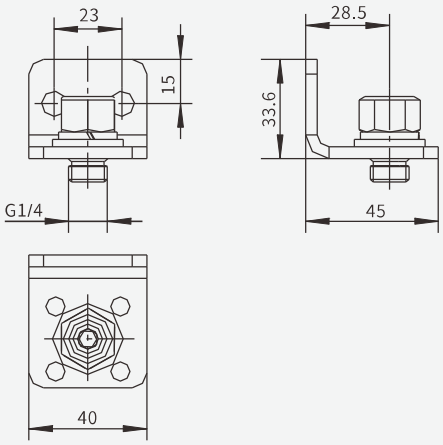

Type K -M12 bolt+L bracket

Silencer(mm)
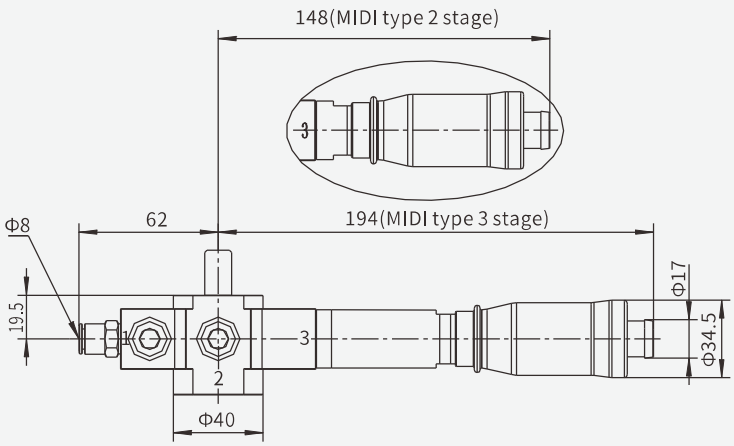
Housing	Silencer
MIDI type 2stage	ZSC16
MIDI type 3stage